TECO	OUTLINE DIMENSIONS 3-PHASE INDUCTION MOTOR	FRAME NO : D160

POLE	kW	HP	RPM	FRAME
2	11	15	2940	D160M1-2
2	15	20	2940	D160M2-2
2	18.5	25	2940	D160L-2
4	11	15	1460	D160M-4
4	15	20	1460	D160L-4
6	7.5	10	970	D160M-6
6	11	15	970	D160L-6

Totally Enclosed Fan-Cooled Type. Squirrel-Cage Rotor.

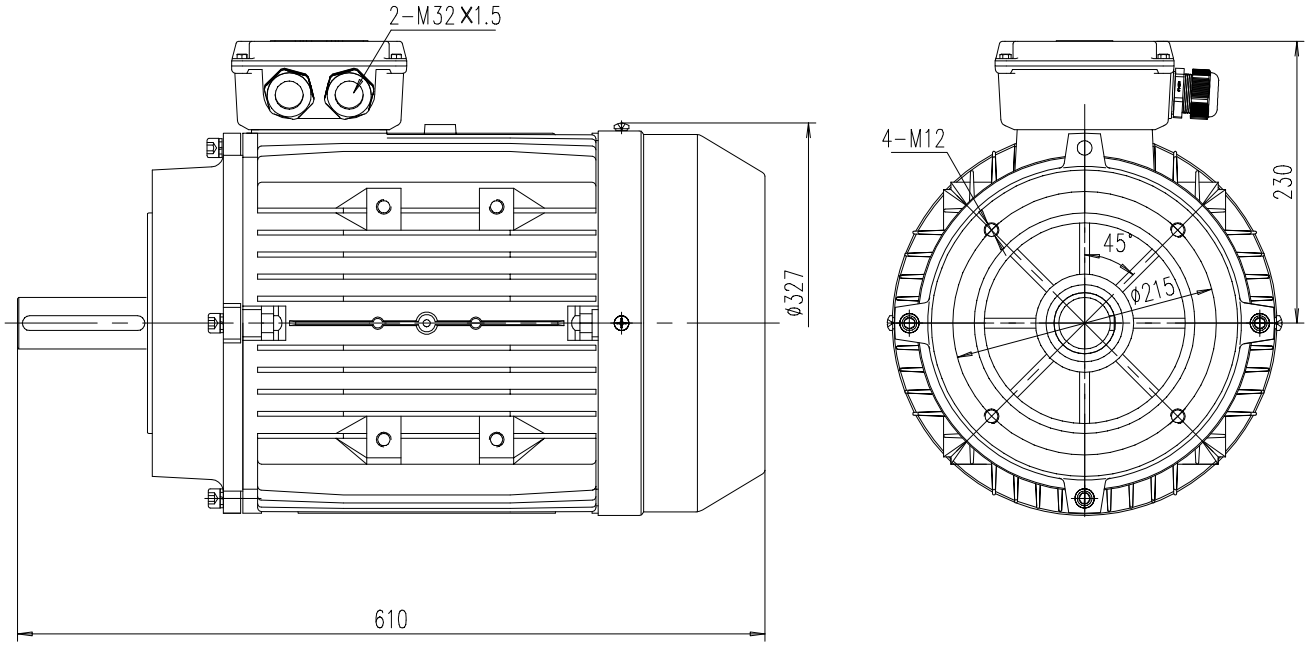

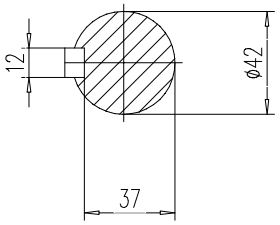

NOTES:

1. DIMENSIONS IN mm.
2. C-FLANGE MOUNTED IM3601.
3. FOR DIRECT DRIVE ONLY.
4. IP55 PROTECTION.

MAX ALLOY

DWN.	DP	16. 12. 24	REV : 00
CHKD.	AN	16. 12. 24	
APPD.	JC	16. 12. 24	